PRODUCT DATA SHEET



PRODUCT CODE

LM4000WHDSTAN

RANGE

Limit

DESCRIPTION

Limit 400mm Cloakroom Wall Hung Door Unit Steelwood

WEBSITE LINK Click Here

CATEGORY	Furniture
WARRANTY DETAILS	10 Years
COLOUR	Steelwood
FINISH APPLICATION	Melamine
PRIMARY MATERIAL	MFC
SECONDARY MATERIAL	MDF
INSTALL TYPE	Wall Mounted
PRODUCT WIDTH MM	395
PRODUCT HEIGHT MM	600
PRODUCT DEPTH MM	218
PRODUCT NET WEIGHT KG	9.5

COLOUR CODE / REFERENCE	Egger H3190 ST19
DRAWER BOX	0
DRAWER RUNNERS	0
WALL HANGERS	Yes
ADJUSTABLE FEET	No
DRAWER OPERATION	No

TECHNICAL DIMENSIONS

Dimensions in mm unless otherwise specified.

Tolerances (per material type) apply.

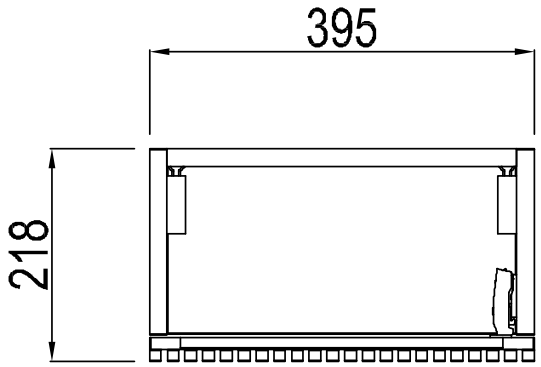

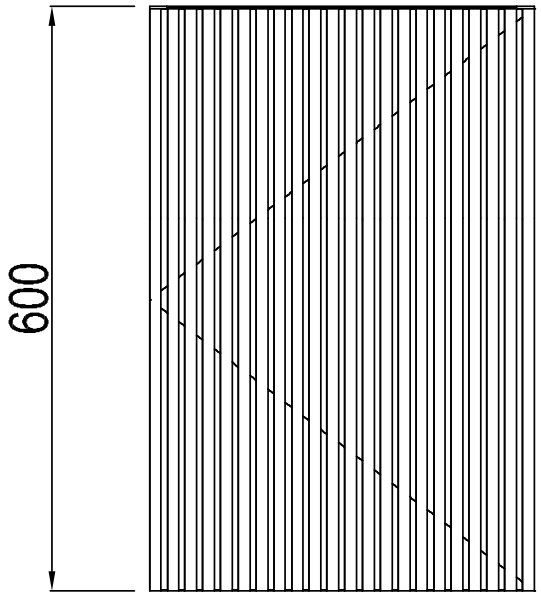

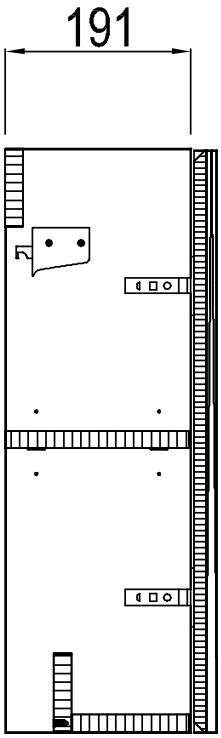

SPARES LIST

Only the parts labelled are available as spares.

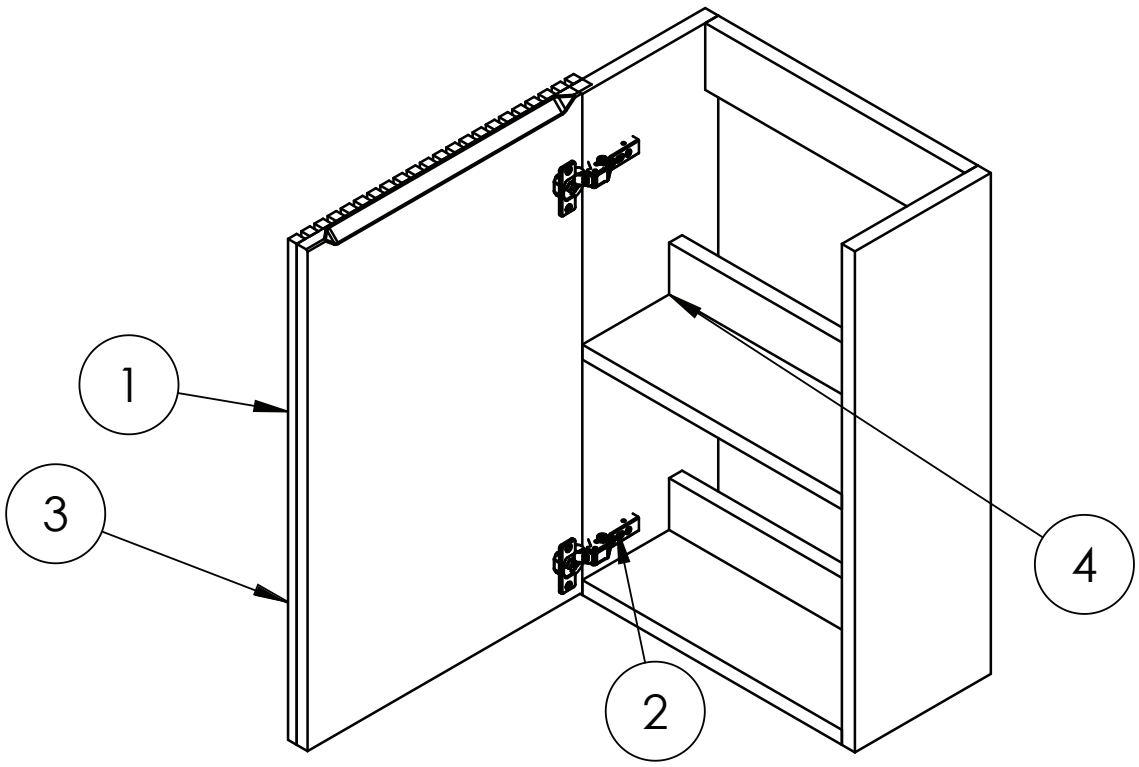

NUMBER	PART CODE	DESCRIPTION
1	DF_LM4000WHDSTAN	Limit 400mm WH Cloakroom Door Front Steelwood
	DF_LM4000WHDMOAN	Limit 400mm WH Cloakroom Door Front Modern Oak
	DF_LM4000WHDRWAN	Limit 400mm WH Cloakroom Door Front Royal Walnut
	DF_LM4000WHDWSAN	Limit 400mm WH Cloakroom Door Front Warm Stone
2	LIMITHINGE	Limit Door Hinges
3	LIMITPUSHOPEN	Limit Push to Open Mechanism
4	LIMITPINS	Limit Shelf Pins