PRODUCT DATA SHEET



PRODUCT CODE

AV800DWHWO

RANGE

Avenue

DESCRIPTION

Avenue Two Drawer Wall Hung Vanity 800mm Windsor Oak

WEBSITE LINK Click Here

CATEGORY	Furniture
WARRANTY DETAILS	10 Years
COLOUR	Windsor Oak
FINISH APPLICATION	Unlacquered
PRIMARY MATERIAL	MFC
SECONDARY MATERIAL	MDF
INSTALL TYPE	Wall Mounted
PRODUCT WIDTH MM	794
PRODUCT HEIGHT MM	580
PRODUCT DEPTH MM	455
PRODUCT NET WEIGHT KG	35

DRAWER BOX	Wood
DRAWER RUNNERS	BLUM
DRAWER EXTENSION	Yes
DRAWER ADJUSTMENT	3 way
WALL HANGERS	Yes
ADJUSTABLE FEET	No
DRAWER CAPACITY	40 kgs
DRAWER OPERATION	Push to Open Soft Close

TECHNICAL DIMENSIONS

Dimensions in mm unless otherwise specified.

Tolerances (per material type) apply.

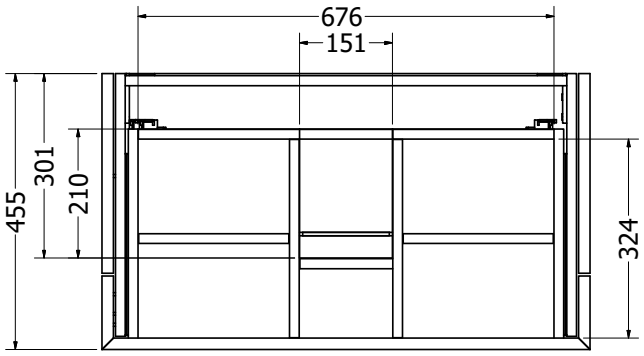

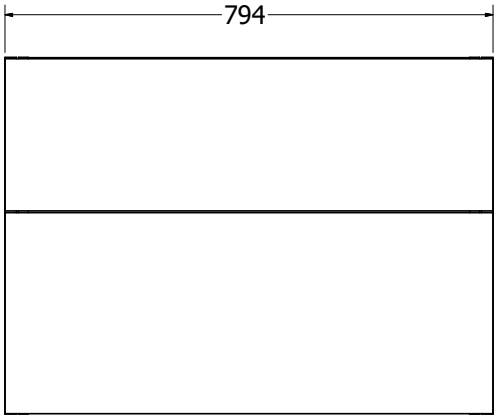

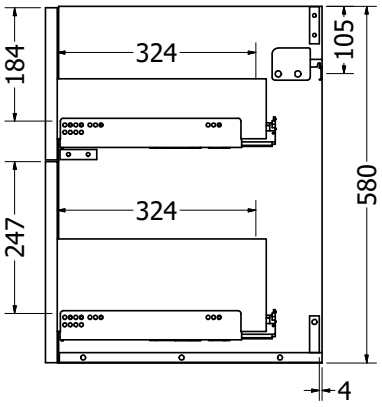

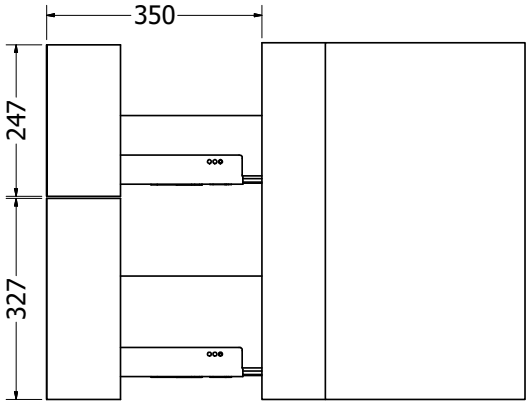

SPARES LIST

Only the parts labelled are available as spares.

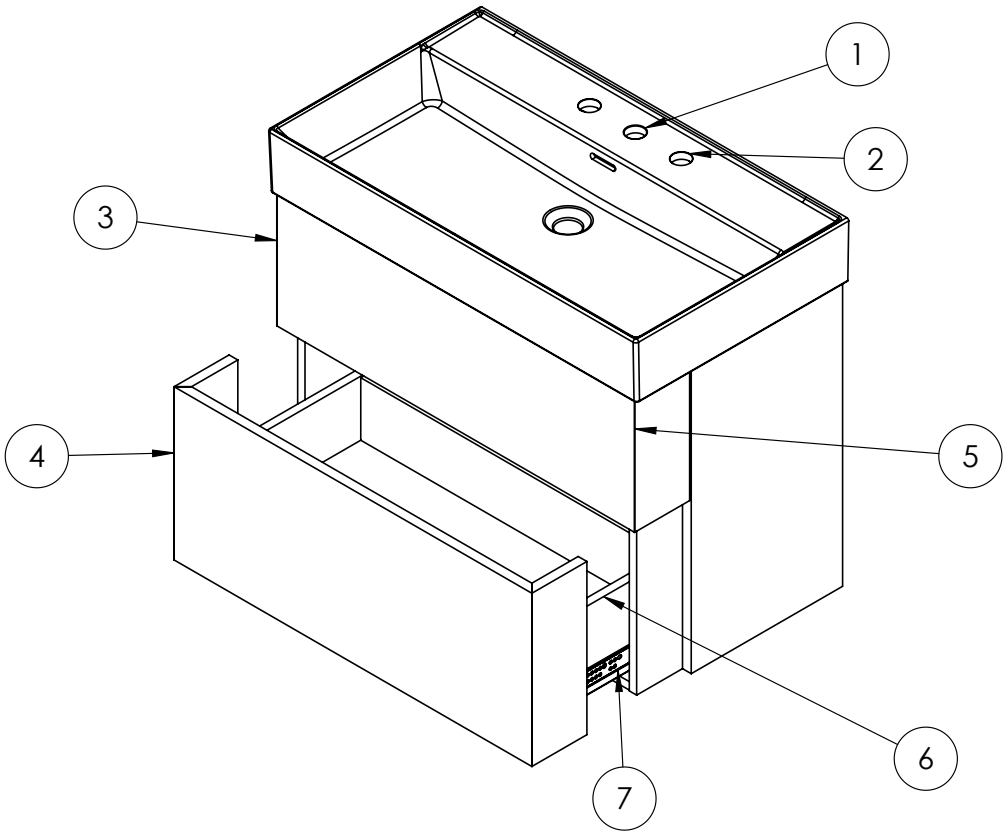

NUMBER	PART CODE	DESCRIPTION
1	AVA0801SCW	Avenue Basin 1TH Tall Ceramic Basin 800mm White
2	AVA0803SCW	Avenue Basin 3TH Tall Ceramic Basin 800mm White
3	TD_AV800WO	Avenue 800 Top Drawer Front Windsor Oak
	TD_AV800SGR	Avenue 800 Top Drawer Front Sage Green
	TD_AV800WS	Avenue 800 Top Drawer Front Warm Stone
4	LD_AV800SGR	Avenue 800 Lower Drawer Front Sage Green
	LD_AV800WO	Avenue 800 Lower Drawer Front Windsor Oak
	LD_AV800WS	Avenue 800 Lower Drawer Front Warm Stone
5	TD_800AV	Avenue 800 Top Drawer
6	LD_800AV	Avenue 800 Lower Drawer
7	RUNNERS_AVENUE	Avenue Drawer Runners