PRODUCT DATA SHEET



PRODUCT CODE

MBFU120W

RANGE

Fusion

DESCRIPTION

Fusion Basin 2 Hole Set Wall Mounted Chrome

WEBSITE LINK Click Here

CATEGORY	Brassware
WARRANTY DETAILS	15 Years
COLOUR	Chrome
FINISH APPLICATION	Electroplated
PRIMARY MATERIAL	Brass
INSTALL TYPE	Wall Mounted
PRODUCT WIDTH MM	360
PRODUCT LENGTH MM	209
PRODUCT NET WEIGHT KG	1.22
MINIMUM PRESSURE (BAR)	0.2
MAX WORKING PRESSURE (BAR)	5

STANDARDS	BS EN 817:2008
NUMBER OF OUTLETS	1
NUMBER OF FUNCTIONS	1
HEADWORK	35mm Single lever ceramic cartridge
SPOUT PROJECTION	205
SWIVEL SPOUT	No
INLET CONNECTIONS THREAD	G1/2”
FLOW REGULATOR	Neoperl aerator
WASTE INCLUDED	No
ANTI-SCALD PROTECTION	No
ENERGY SAVING	No

PRESSURE (BAR)	**0.2**	**0.5**	**1**	**2**	**3**	**4**	**5**
PRIMARY FLOWRATE	4	8.9	12.3	17.1	20.9		26.8
HANDSET FLOWRATE							
MASSAGE FLOW RATE							
AIR FLOW RATE							
WIRE FLOW RATE							
WATERFALL FLOW RATE							
MIST FLOW RATE							
HANDSPRAY FLOW RATE							

TECHNICAL DIMENSIONS

Dimensions in mm unless otherwise specified.

Tolerances (per material type) apply.

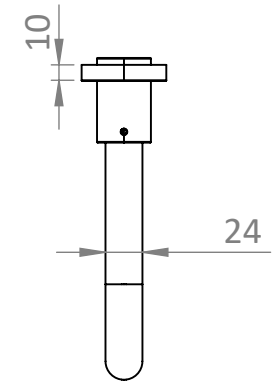

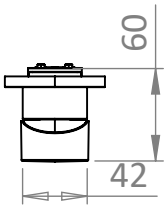

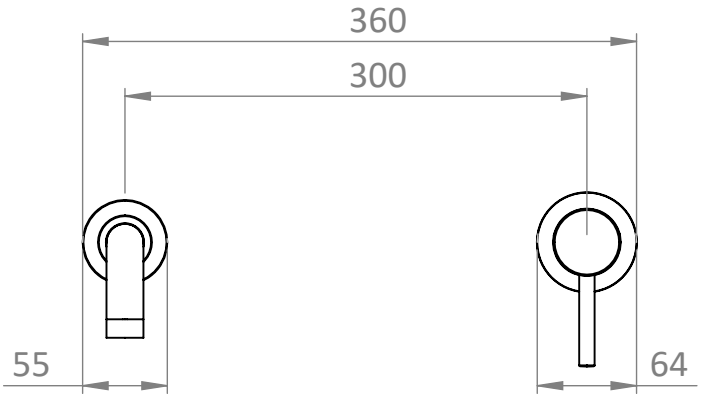

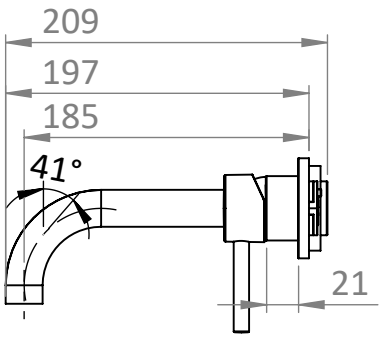

SPARES LIST

Only the parts labelled are available as spares.

NUMBER	PART CODE	DESCRIPTION
1	MB1023	35mm Ceramic Cartridge (Non click)
2	MB1033	35mm Ceramic Cartridge
3	MB1079	2 Step Non Click 35mm Ceramic Cartridge
4	MB1185	Base Ring for Wall Mounted
5	MB1164	Lever for Fusion Basin 2 Hole