PRODUCT DATA SHEET

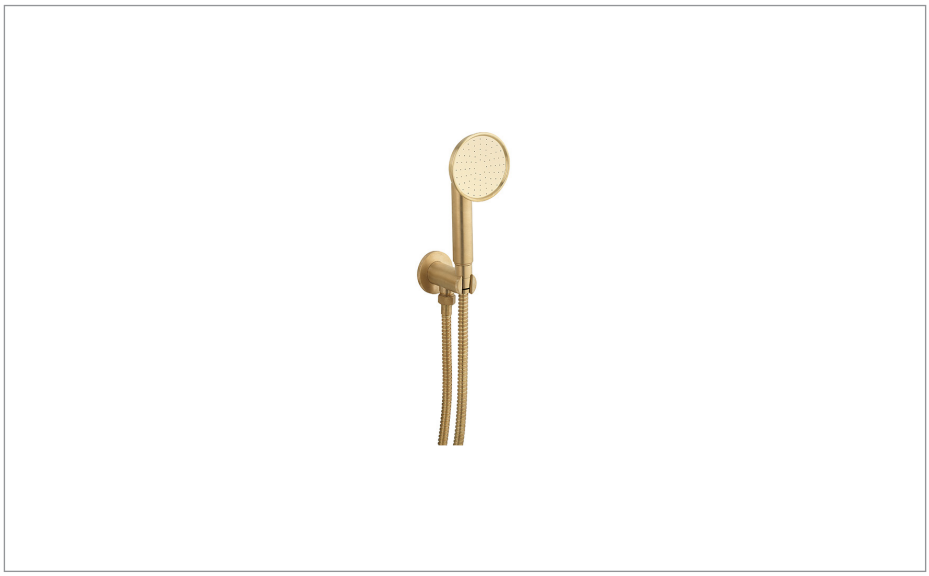

PRODUCT CODE

PRI963UB

RANGE

MPRO Industrial

DESCRIPTION

MPRO Industrial Wall Outlet & Handset Brushed Brass Unlaquered

WEBSITE LINK Click Here

CATEGORY	Brassware
WARRANTY DETAILS	15 Years
COLOUR	Unlacquered Brushed Brass
FINISH APPLICATION	Unlacquered
PRIMARY MATERIAL	Brass
INSTALL TYPE	Wall Mounted
PRODUCT WIDTH MM	90
PRODUCT HEIGHT MM	255
PRODUCT LENGTH MM	120
PRODUCT DEPTH MM	120
PRODUCT NET WEIGHT KG	1.5
MINIMUM PRESSURE (BAR)	0.2
MAX WORKING PRESSURE (BAR)	5

STANDARDS	BS EN1112:2008 # BS EN 1113:2015
APPROVAL	WRAS 2006361
NUMBER OF OUTLETS	1
NUMBER OF FUNCTIONS	1
SWIVEL SPOUT	No
INLET CONNECTIONS THREAD	G1/2”
OUTLET CONNECTIONS THREAD	G1/2”
WASTE INCLUDED	No
ANTI-SCALD PROTECTION	No
ENERGY SAVING	No

PRESSURE (BAR)	**0.2**	**0.5**	**1**	**2**	**3**	**4**	**5**
PRIMARY FLOWRATE	3.6	5.66	7.73	8	8	8	8
HANDSET FLOWRATE							
MASSAGE FLOW RATE							
AIR FLOW RATE							
WIRE FLOW RATE							
WATERFALL FLOW RATE							
MIST FLOW RATE							
HANDSPRAY FLOW RATE							

Part of the
Bathroom Brands Group

TECHNICAL DIMENSIONS

Dimensions in mm unless otherwise specified.

Tolerances (per material type) apply.

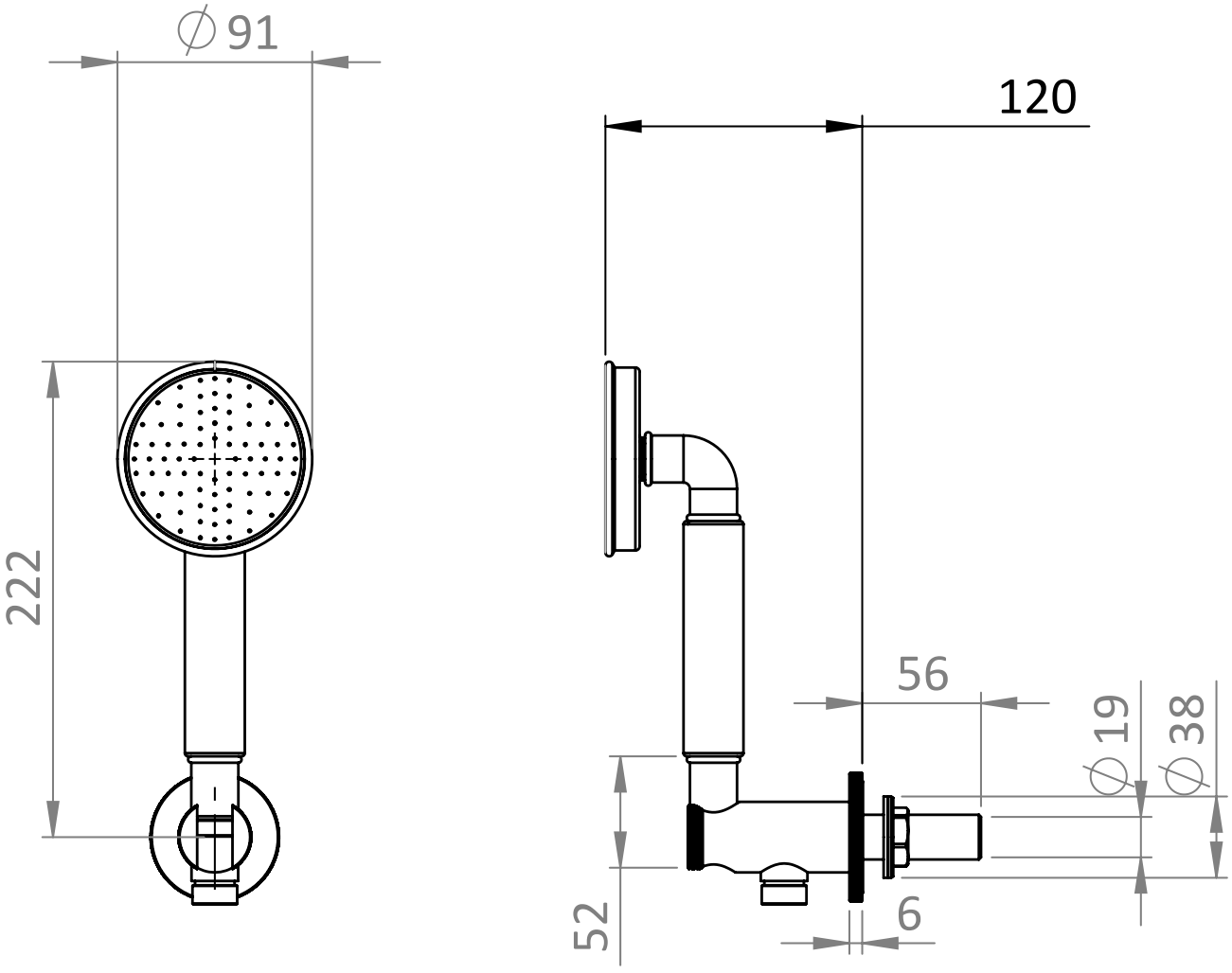

SPARES LIST

Only the parts labelled are available as spares.

NUMBER	PART CODE	DESCRIPTION
1	57MPROINDSP027C	MPRO Industrial Shower Handset with Hose C Finish
	57MPROINDSP027BB	MPRO Industrial Shower Handset with Hose U Brass Finish
	57MPROINDSP027MB	MPRO Industrial Shower Handset with Hose Carbon Blk Finish
2	57MPROINDSP029BB	MPRO Ind Shower Hose Unlaq Brass
3	57MPROINDSP30BB	PRI963UB Wall Ring